LAMPIRAN

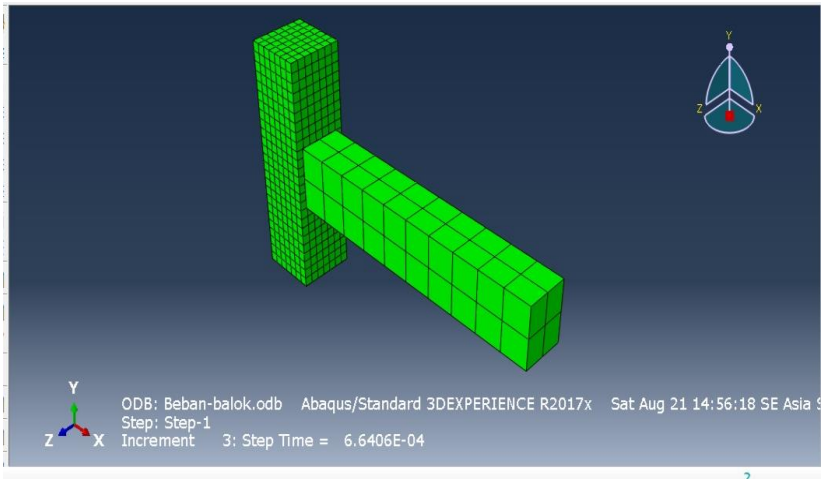
Y
Z
X
ODB: Beban-balok.odb Abaqus/Standard 3DEXPERIENCE R2017x Sat Aug 21 14:56:18 SE Asia
Step: Step-1
Increment 3: Step Time = 6.6406E-04

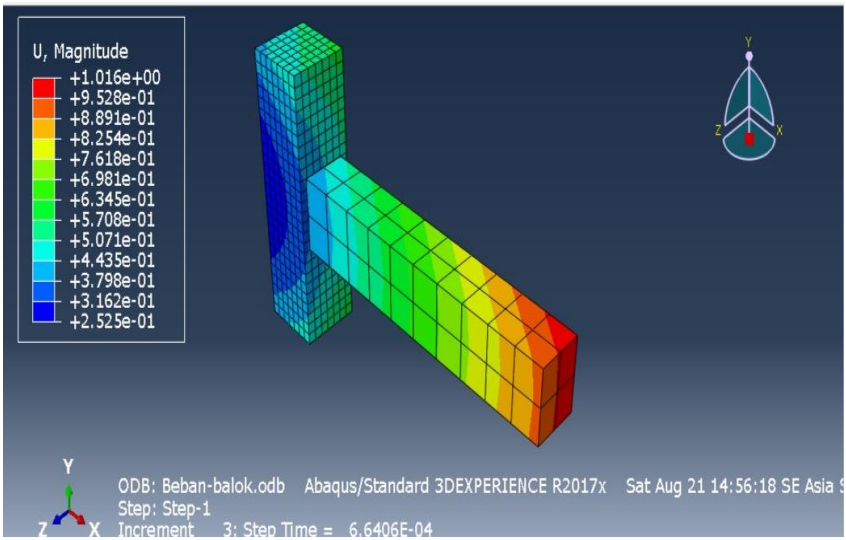
U, Magnitude
+1.016e+00
+9.528e-01
+8.891e-01
+8.254e-01
+7.618e-01
+6.981e-01
+6.345e-01
+5.708e-01
+5.071e-01
+4.435e-01
+3.798e-01
+3.162e-01
+2.525e-01
Y
Z
X
ODB: Beban-balok.odb Abaqus/Standard 3DEXPERIENCE R2017x Sat Aug 21 14:56:18 SE Asia
Step: Step-1
Increment 3: Step Time = 6.6406E-04

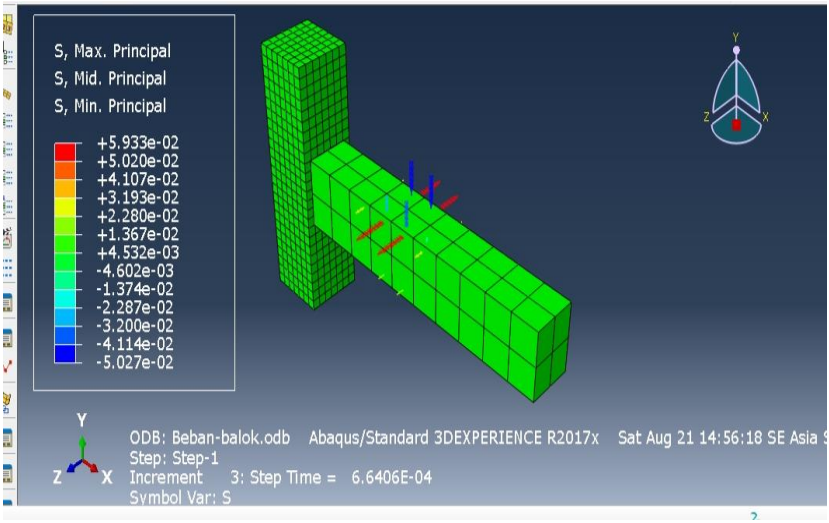
S, Max. Principal
S, Mid. Principal
S, Min. Principal
+5.933e-02
+5.020e-02
+4.107e-02
+3.193e-02
+2.280e-02
+1.367e-02
+4.532e-03
-4.602e-03
-1.374e-02
-2.287e-02
-3.200e-02
-4.114e-02
-5.027e-02
Y
Z
X
ODB: Beban-balok.odb Abaqus/Standard 3DEXPERIENCE R2017x Sat Aug 21 14:56:18 SE Asia
Step: Step-1
Increment 3: Step Time = 6.6406E-04
Symbol Var: S

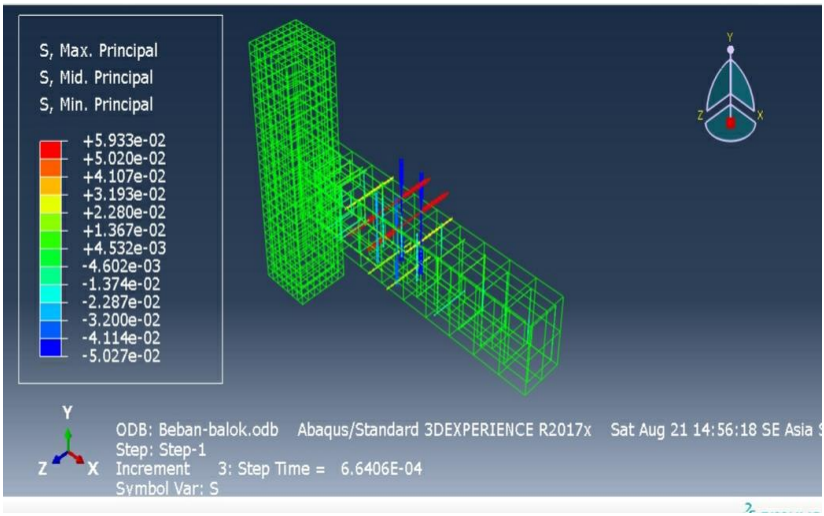
S, Max. Principal
S, Mid. Principal
S, Min. Principal
+5.933e-02
+5.020e-02
+4.107e-02
+3.193e-02
+2.280e-02
+1.367e-02
+4.532e-03
-4.602e-03
-1.374e-02
-2.287e-02
-3.200e-02
-4.114e-02
-5.027e-02
Y
Z
X
ODB: Beban-balok.odb Abaqus/Standard 3DEXPERIENCE R2017x Sat Aug 21 14:56:18 SE Asia
Step: Step-1
Increment 3: Step Time = 6.6406E-04
Symbol Var: S

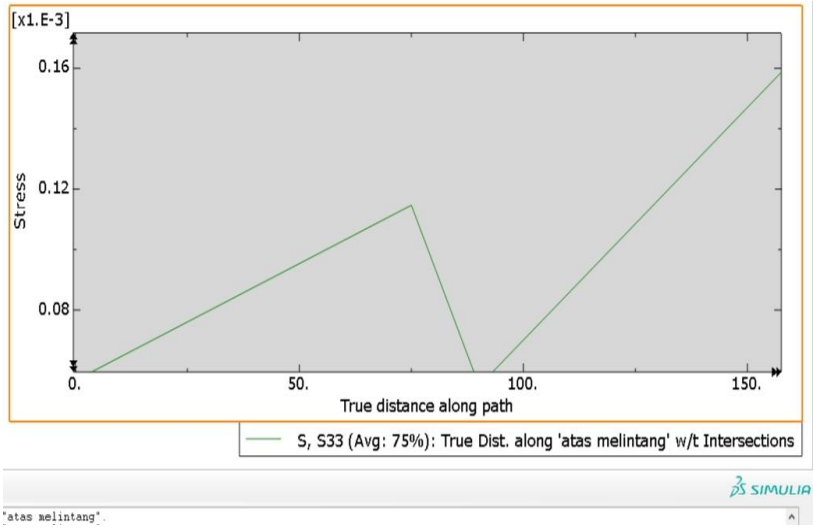
[x1.E-3]
0.16
0.12
0.08
Stress
0.
50.
100.
150.
True distance along path
S, S33 (Avg: 75%): True Dist. along 'atas melintang' w/t Intersections
SIMULIA
'atas melintang'.

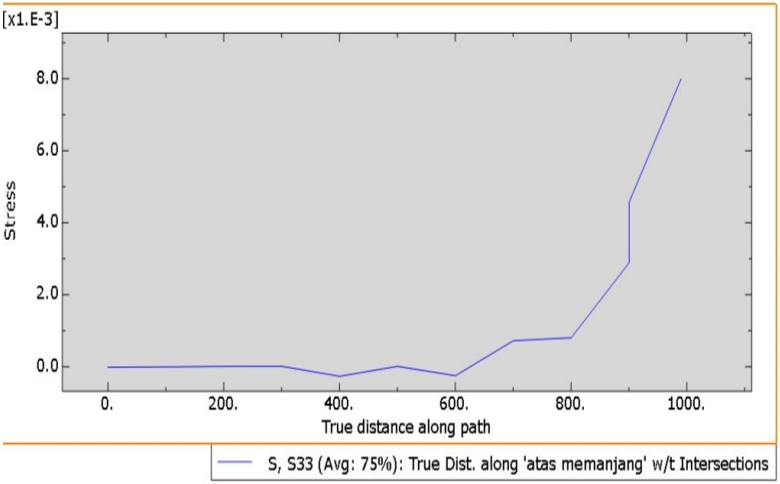
[x1.E-3]
8.0
6.0
4.0
2.0
0.0
Stress
0.
200.
400.
600.
800.
1000.
True distance along path
S, S33 (Avg: 75%): True Dist. along 'atas memanjang' w/t Intersections

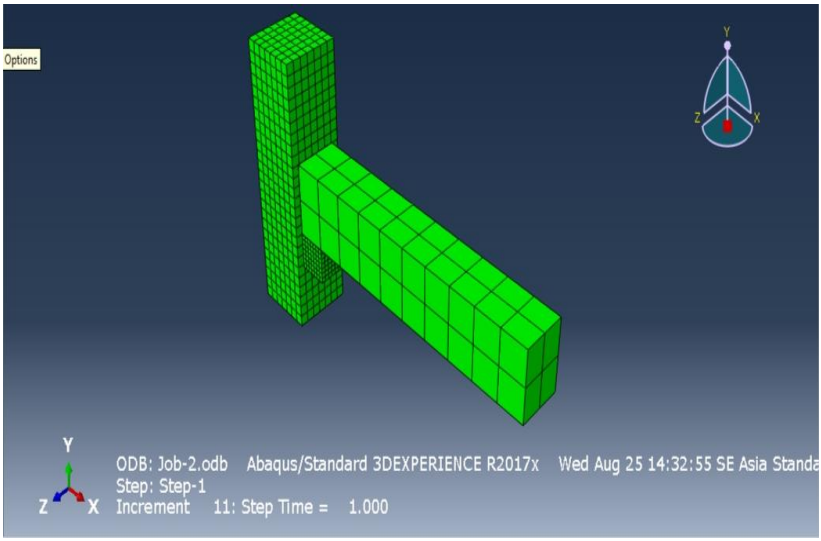
Options
Y
Z
X
ODB: Job-2.odb Abaqus/Standard 3DEXPERIENCE R2017x Wed Aug 25 14:32:55 SE Asia Standa
Step: Step-1
Increment 11: Step Time = 1.000

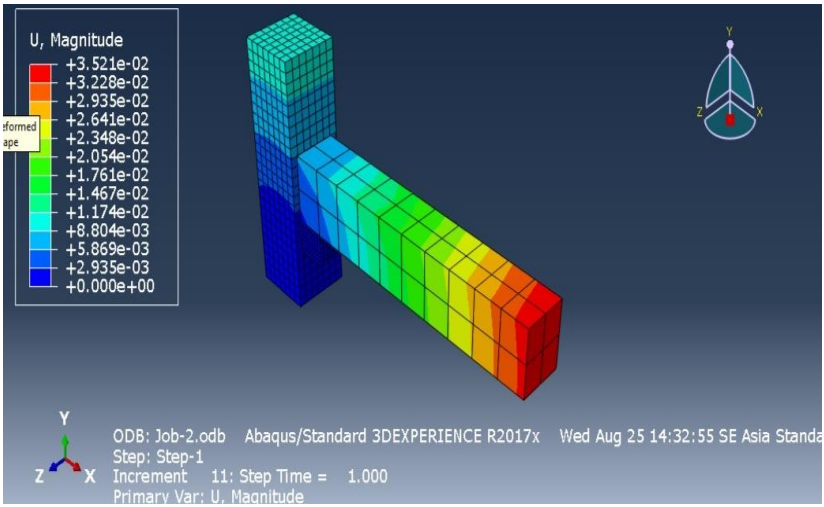
U, Magnitude
+3.521e-02
+3.228e-02
+2.935e-02
+2.641e-02
+2.348e-02
+2.054e-02
+1.761e-02
+1.467e-02
+1.174e-02
+8.804e-03
+5.869e-03
+2.935e-03
+0.000e+00
Y
Z
X
ODB: Job-2.odb Abaqus/Standard 3DEXPERIENCE R2017x Wed Aug 25 14:32:55 SE Asia Standa
Step: Step-1
Increment 11: Step Time = 1.000
Primary Var: U, Magnitude

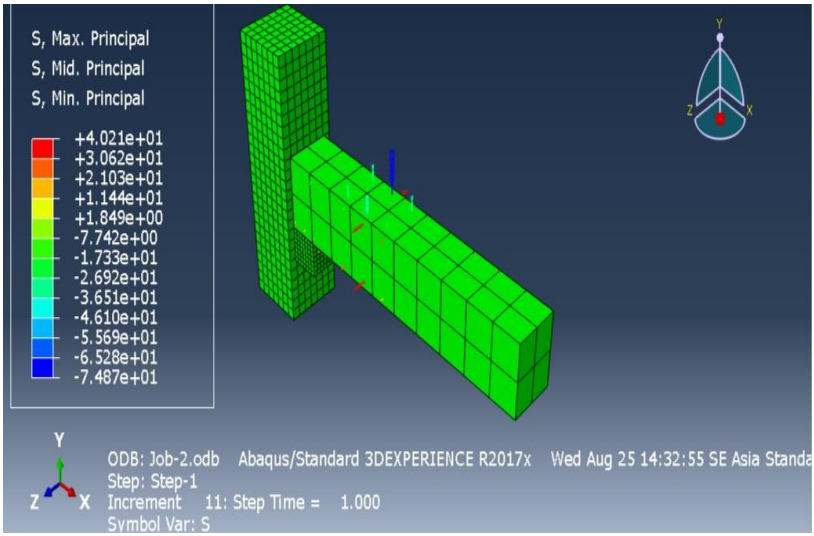
S, Max. Principal
S, Mid. Principal
S, Min. Principal
+4.021e+01
+3.062e+01
+2.103e+01
+1.144e+01
+1.849e+00
-7.742e+00
-1.733e+01
-2.692e+01
-3.651e+01
-4.610e+01
-5.569e+01
-6.528e+01
-7.487e+01
Y
Z
X
ODB: Job-2.odb Abaqus/Standard 3DEXPERIENCE R2017x Wed Aug 25 14:32:55 SE Asia Standa
Step: Step-1
Increment 11: Step Time = 1.000
Symbol Var: S

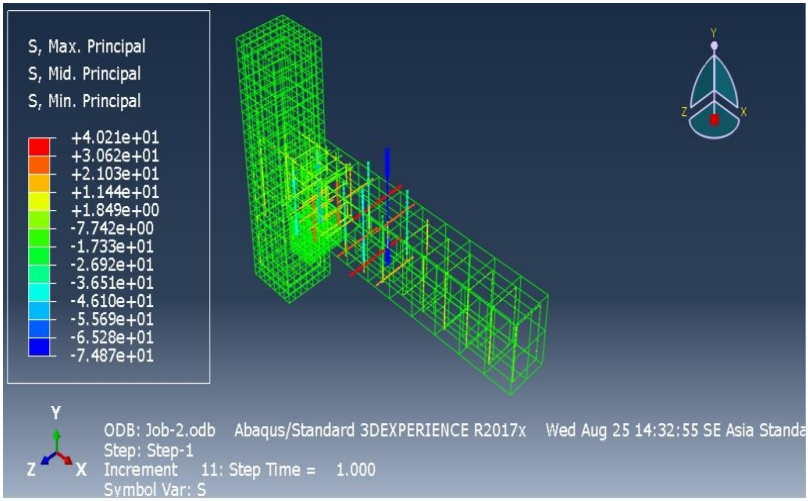
S, Max. Principal
S, Mid. Principal
S, Min. Principal
+4.021e+01
+3.062e+01
+2.103e+01
+1.144e+01
+1.849e+00
-7.742e+00
-1.733e+01
-2.692e+01
-3.651e+01
-4.610e+01
-5.569e+01
-6.528e+01
-7.487e+01
Y
Z
X
ODB: Job-2.odb Abaqus/Standard 3DEXPERIENCE R2017x Wed Aug 25 14:32:55 SE Asia Standa
Step: Step-1
Increment 11: Step Time = 1.000
Symbol Var: S

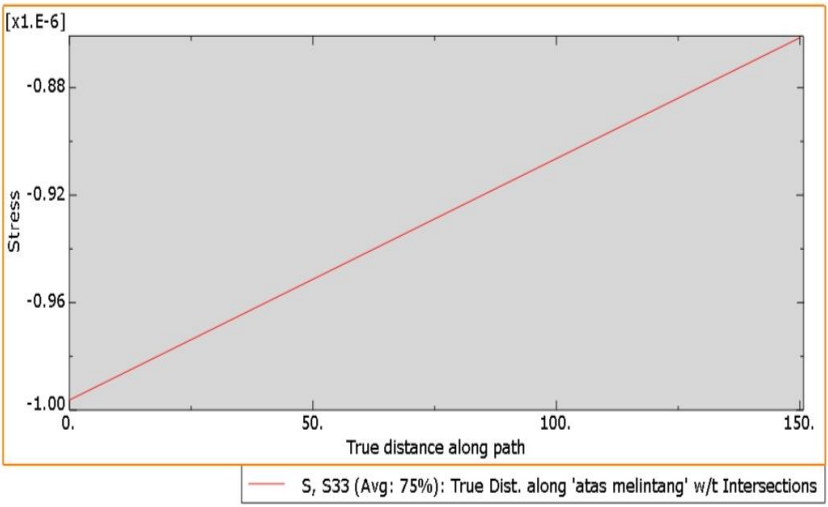
[x1.E-6]
-0.88
-0.92
-0.96
-1.00
Stress
0.
50.
100.
150.
True distance along path
S, S33 (Avg: 75%): True Dist. along 'atas melintang' w/t Intersections

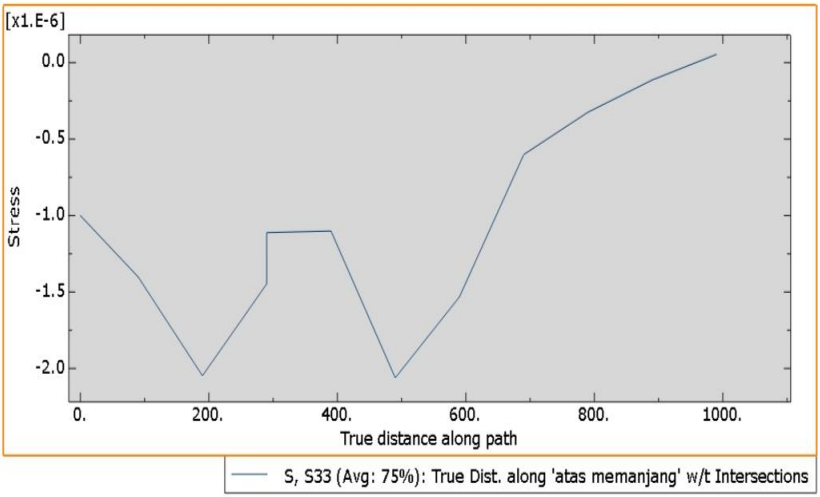
[x1.E-6]
0.0
-0.5
-1.0
-1.5
-2.0
Stress
0.
200.
400.
600.
800.
1000.
True distance along path
S, S33 (Avg: 75%): True Dist. along 'atas memanjang' w/t Intersections